Lithoss

DESIGNED PURENESS

COSMOPOLITAN

COSMOPOLITAN

The "Cosmopolitan" collection redefines elegance within the hospitality world, perfectly blending design and function.

It delivers a defined balance of sleek aesthetics and intuitive performance.
Available in a palette of refined finishes,
the cosmopolitan range complements any interior with subtle elegance.

COSMOPOLITAN ROUND

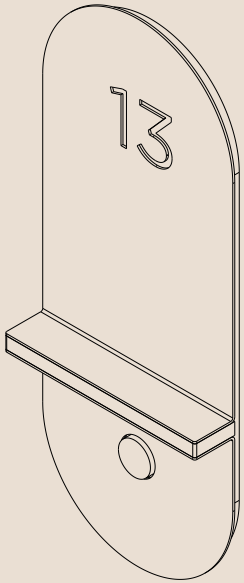

COSMOPOLITAN SQUARE

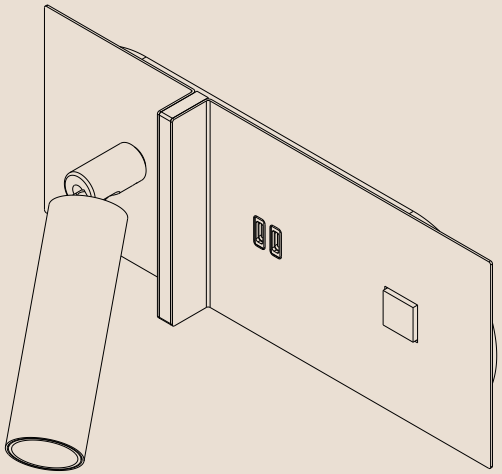

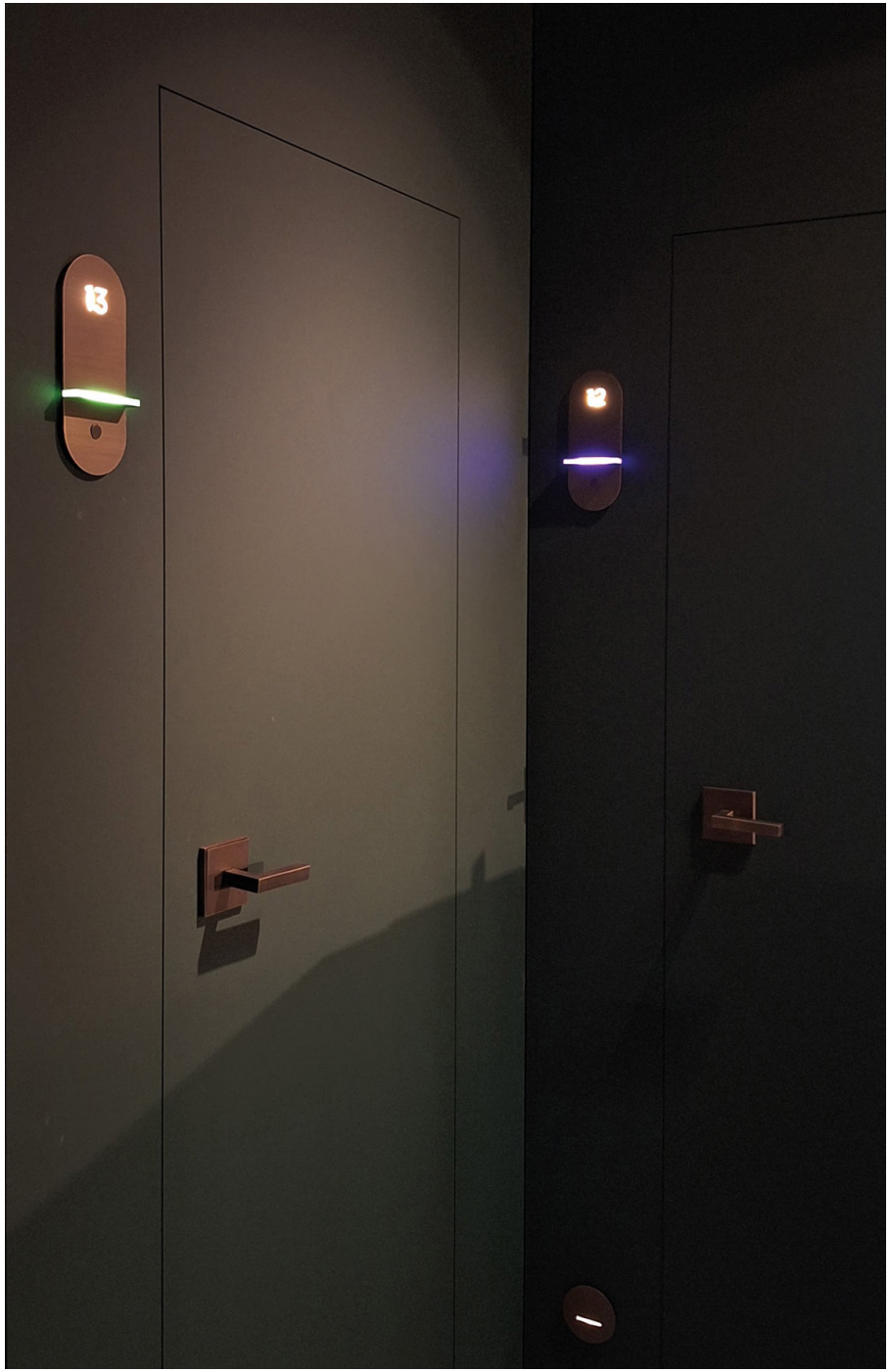
13
12

COSMOPOLITAN
SET UP & COMBINATIONS

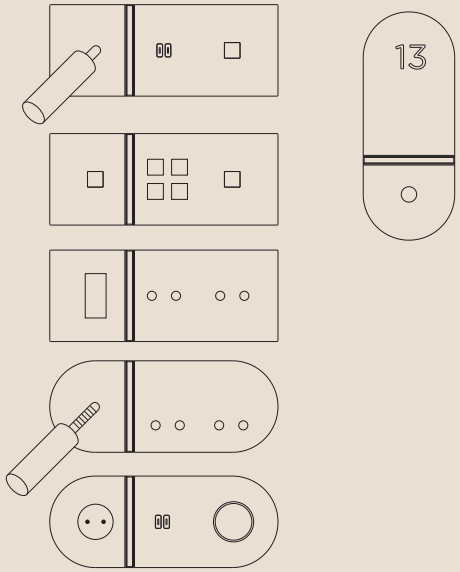

The Cosmopolitan comes in many possible combinations.
Please contact us for more information.

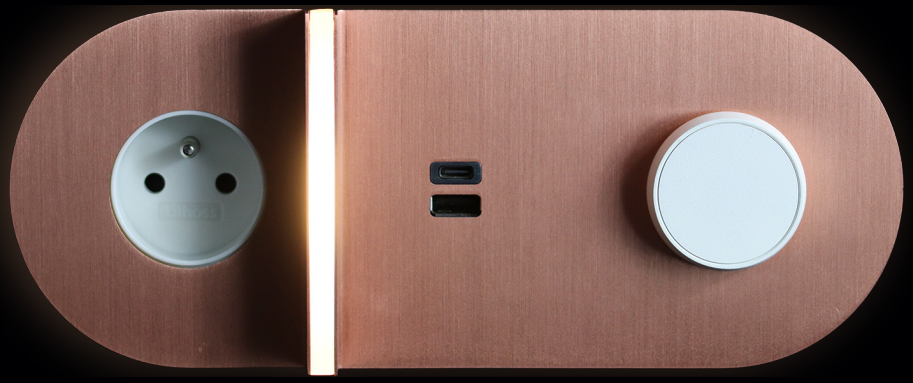

COSMOPOLITAN CUSTOMIZATION

Cosmopolitan combines style and functionality, making it ideal for hotel corridors. It features highly customizable room number options, allowing seamless adaptation to any layout or branding requirement.
Beyond its practical use in hospitality settings, it also brings the luxurious and welcoming ambiance of a hotel into your own bedroom—adding a refined touch of elegance and sophistication to your personal space.

SYNERGY

TAL
EXPLORING LIGHT

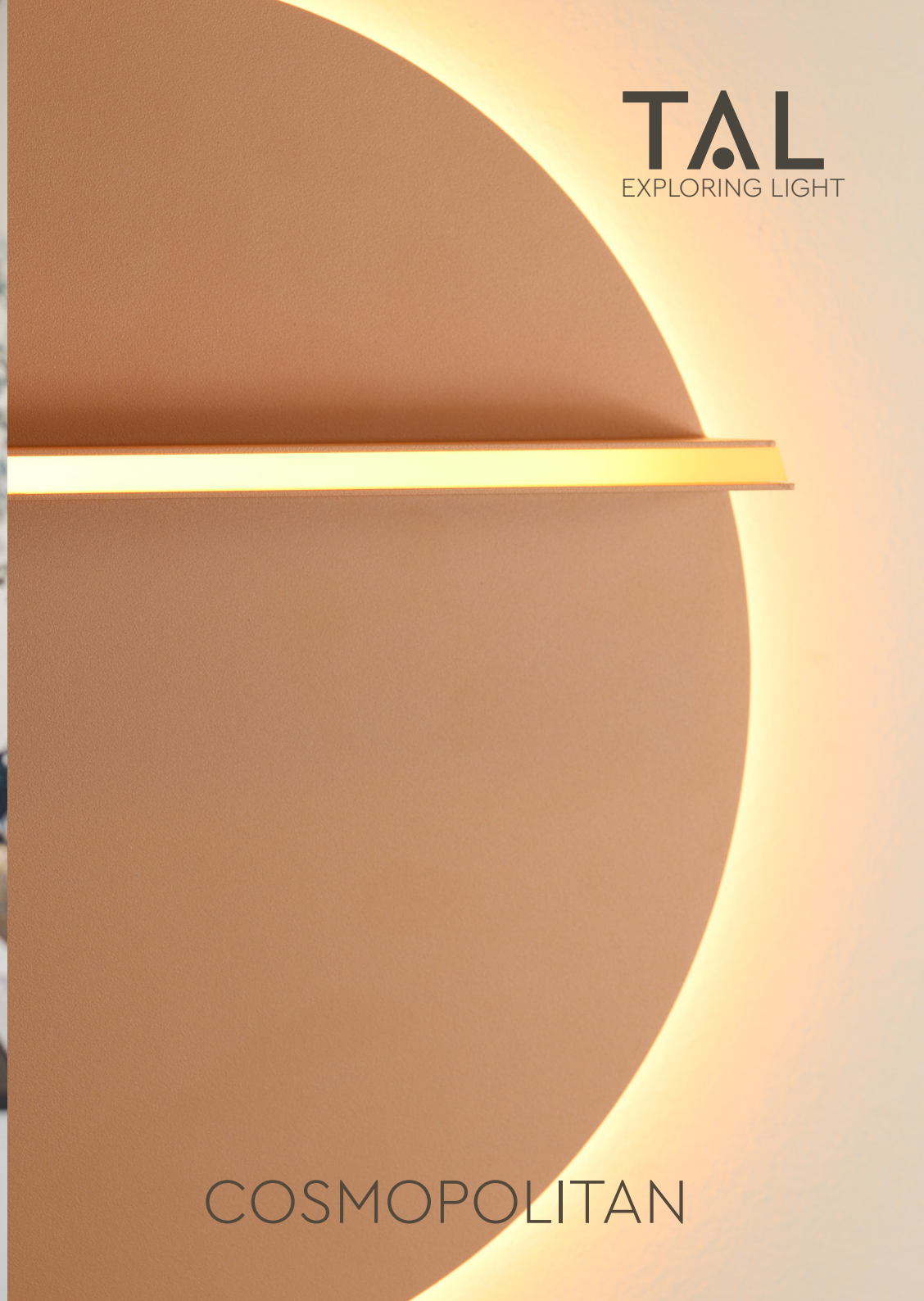

COSMOPOLITAN

COSMOPOLITAN

The Cosmopolitan Collection
Where design meets sophistication.
The Cosmopolitan Collection reimagines elegance, seamlessly combining striking design with exceptional functionality. Its indirect lighting casts a warm, inviting glow, creating the perfect ambiance in any setting. Ideal for hotels, restaurants, and premium spaces where style and substance go hand in hand, Cosmopolitan is the ultimate choice for those who demand both beauty and performance.

With this collection, TAL takes customization to the next level, offering tailored finishes to meet every vision—from the architect's concept to the end user's desire. Every detail can be crafted to perfection, making each piece truly unique.

COSMOPOLITAN ROUND

OUTPUT	429lm
INPUT	24V DC - 6W- DRIVER EXCLUSIVE
IP	20
LED COLOUR	2700K
FINISH	WHITE - BLACK - BRUSHED BRASS - RED COPPER - BRONZE ANTIQUE
BEAM ANGLE	180°
CRI	90
INSTALLATION	WALL MOUNTED

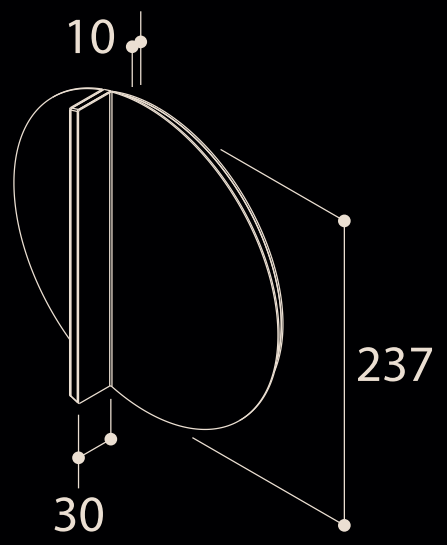

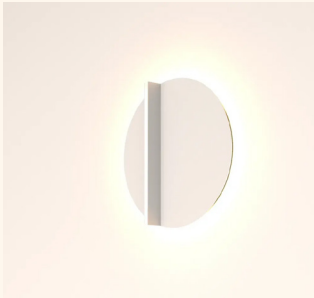

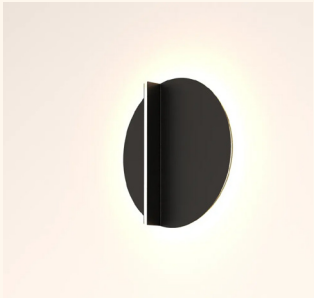

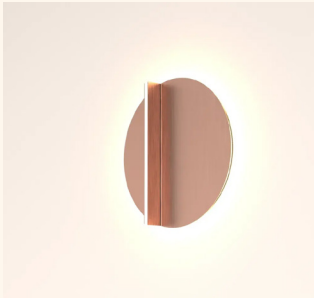

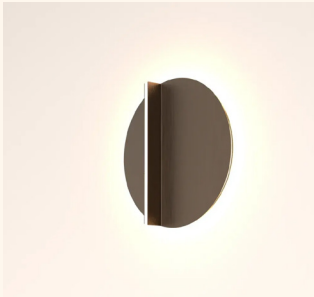

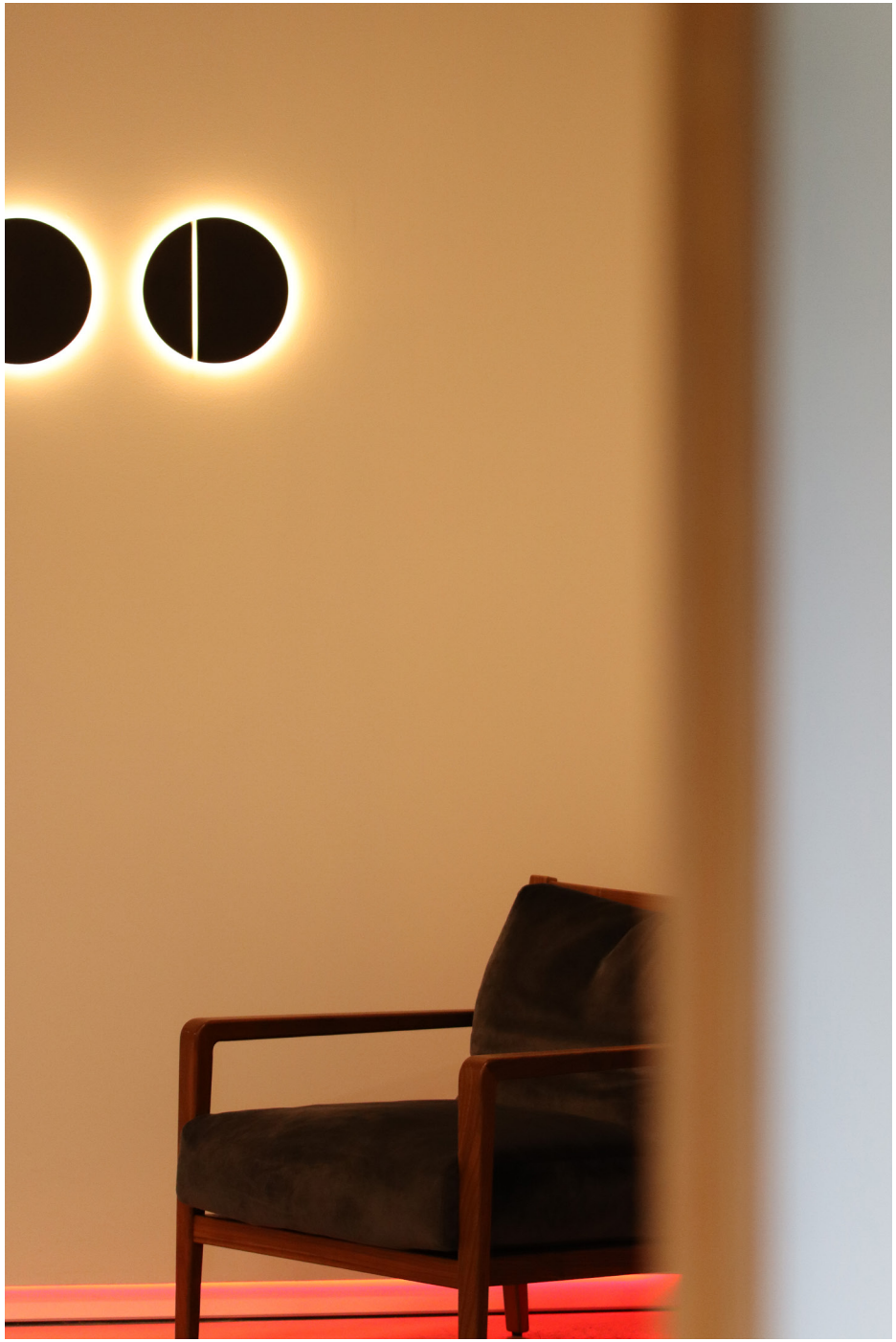

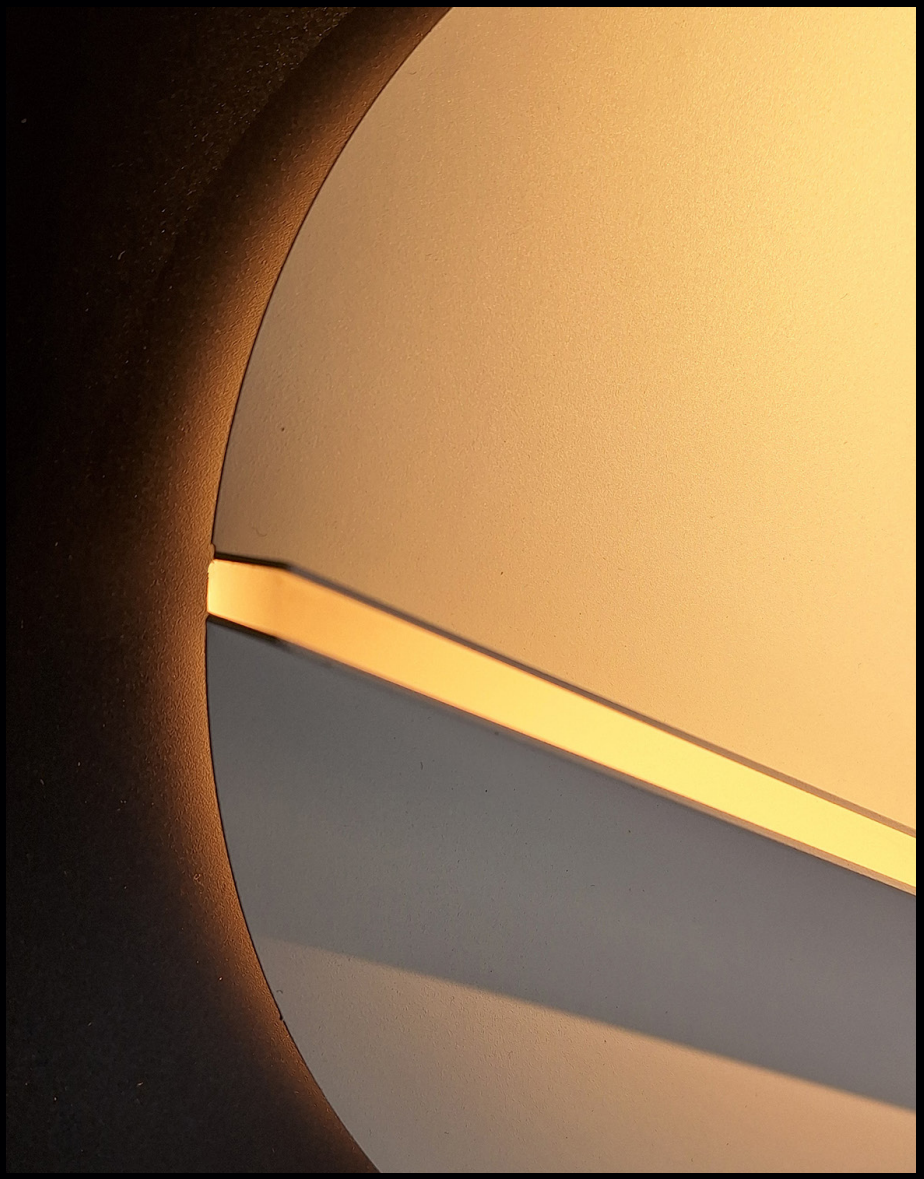

COSMOPOLITAN SQUARE

OUTPUT	429lm
INPUT	24V DC - 6W- DRIVER EXCLUSIVE
IP	20
LED COLOUR	2700K
FINISH	WHITE - BLACK - BRUSHED BRASS - RED COPPER - BRONZE ANTIQUE
BEAM ANGLE	180°
CRI	90
INSTALLATION	WALL MOUNTED

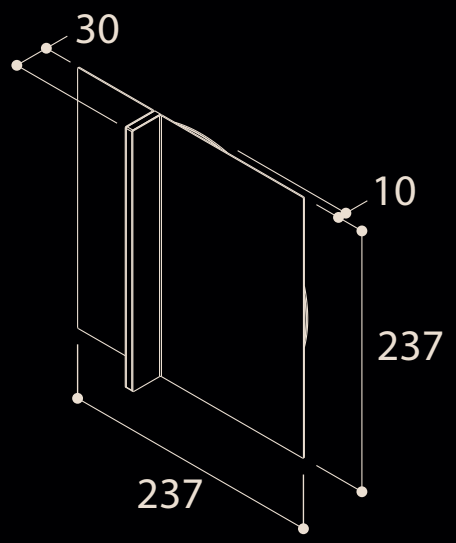

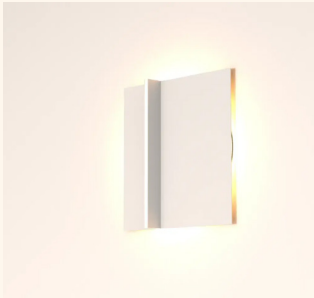

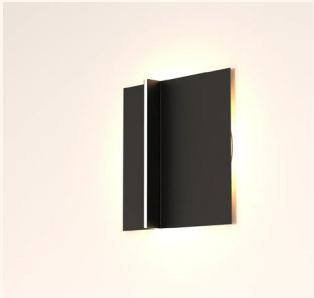

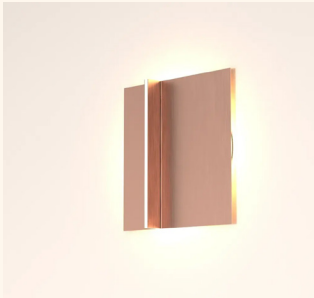

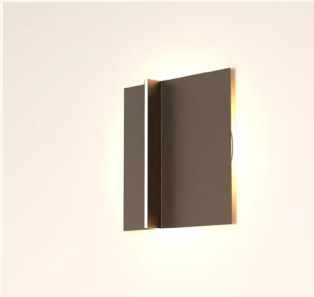

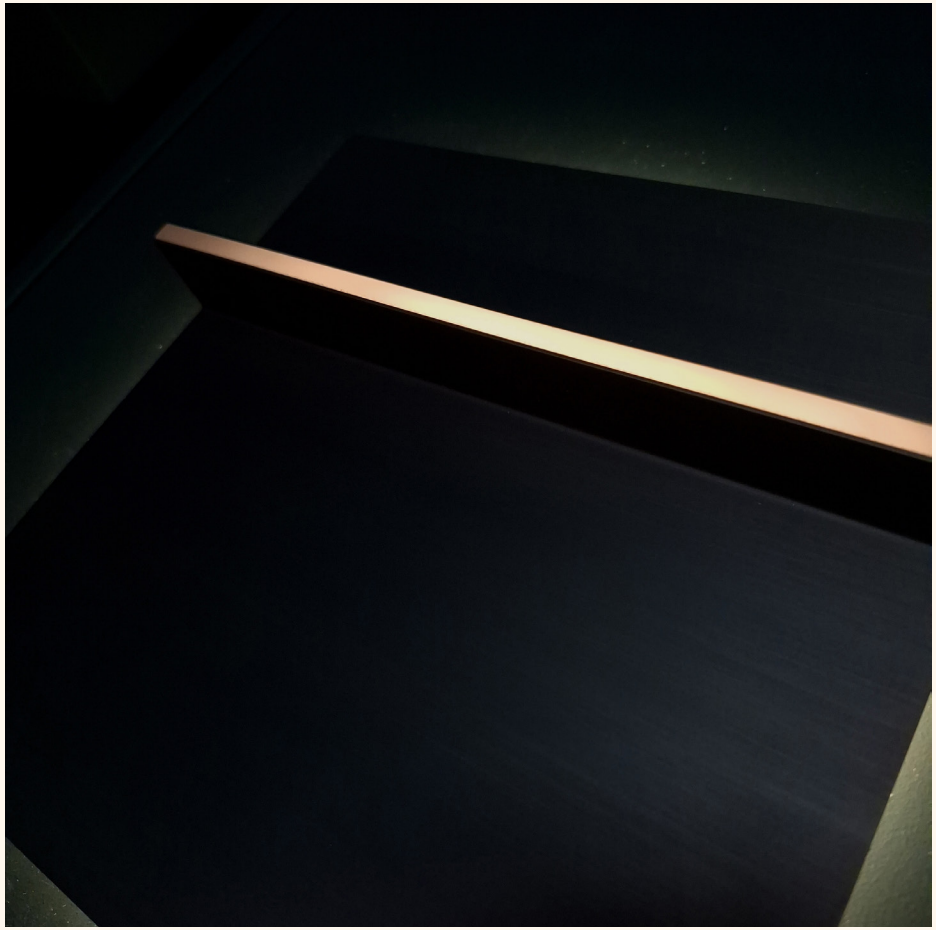

COSMOPOLITAN CUSTOMIZATION

In addition to our standard colour range, we're excited to inspire you with a variety of custom finishing options. The Cosmopolitan is available in a primer version, allowing you to apply your own colour or painting technique for a truly personal touch.
We also offer any RAL colour upon request, giving you full flexibility to match your project's aesthetic.
Looking for something more exclusive?
In our lab, we've already experimented with mirror, veneer, and even textile finishes — and the results are stunning.

Feel free to ask.

mirror

textile

wood veneer

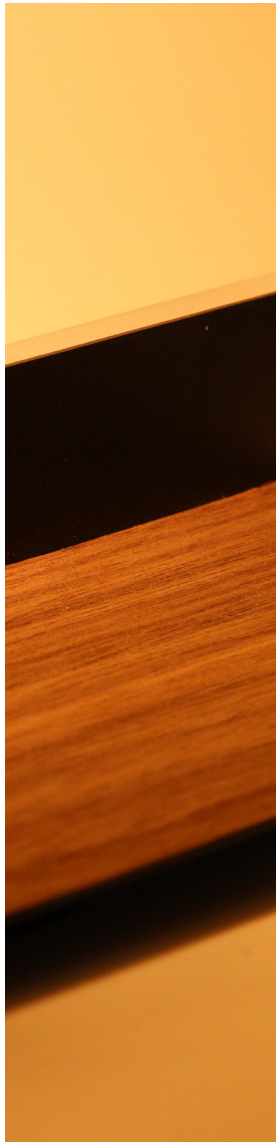

COSMOPOLITAN

Lithoss
DESIGNED PURENESS

www.lithoss.be

TAL
EXPLORING LIGHT

www.tal.be